DS-022-24 Attachment 2

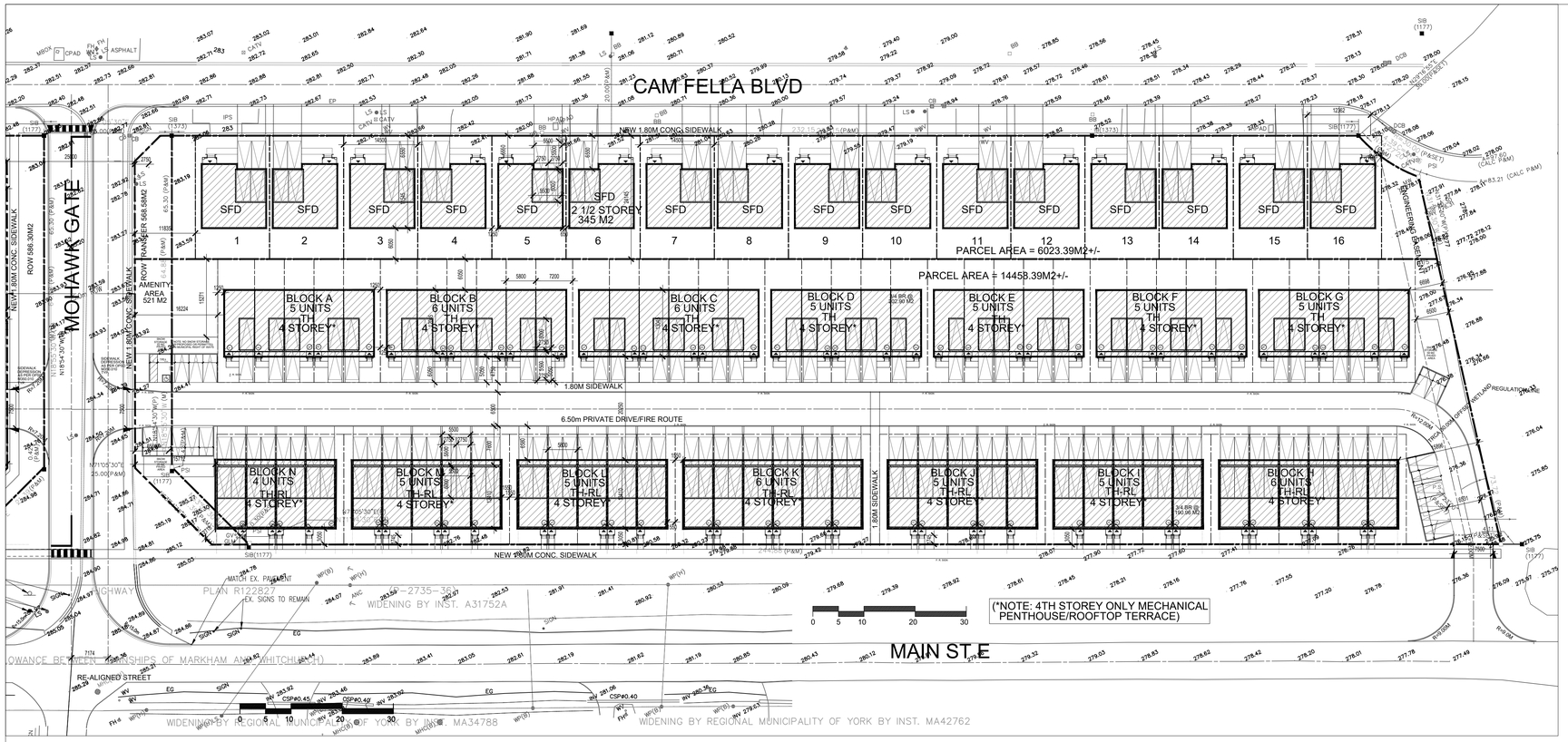

1 SP100 SITE PLAN
SCALE: 1:500

SITE STATISTICS: EAST - 316-386 CAM FELLA BLVD:	
LOT AREA (GROSS)	= 1.9913HA +/- (4.92AC+/-)
ROW TRANSFER	= 0.0568HA+/- (0.14AC+/-)
TOTAL PARCEL	= 2.0481HA+/- (5.06AC+/-)
SFD PARCEL	= 0.6023HA +/- (1.49AC+/-)
FREEHOLD CONDO PARCEL	= 1.4458HA +/- (3.57AC +/-)
SFD	= 16 UNITS
DENSITY	= 27 UPH (11 UPA)
MIN. LOT FRONTAGE	= 14.50M
MIN. LOT AREA	= 330M2
MAX. LOT COV	= 50%
MIN. FRONT YARD STBCK	= 5.50M/6.50M
MIN. REAR YARD STBCK	= 6.00M
MIN. INT SIDE YARD	= 0.60M/1.20M
MIN. EXT. SIDE YARD	= 2.50M
MAX. HEIGHT	= 10.75M
PARKING SPACES	
SFD RES @ 2.0/U (32 REQ'D)	= 64
CONDO TH - COMMON ELEMENT	= 73 UNITS
DENSITY:	= 51 UPH (21 U/AC)
MIN. POTL FRONTAGE	= 5.80M
MIN. POTL AREA	= 124M2
MAX. POTL LOT COV	= 65%
MIN. FRONT YARD STBCK	= 3.00M
MIN. REAR YARD STBCK	= 3.00M
MIN. INT SIDE YARD	= 1.20M
MIN. EXT. SIDE YARD	= 2.50M
GFA :	= 14370 M2
FSI :	= 0.99
BLDG COV	= 6117 M2 (43%)
ASPHALT	= 4385 M2 (30%)
LOS	= 3956 M2 (27%)
BUILDING HEIGHT	= 4 STOREYS - 12.25M
PARKING:	
TH RES @ 2.0/U (146 REQ'D)	= 218 (2.98 SP/U) (INCL 1 BF)
VISITOR @ 0.25/U (18 REQ'D)	= 17 (0.20 SP/U) (S.S. EXCEPTION)
TOTAL (164 REQ'D)	= 235 (3.22 SP/U)
SNOW STORAGE	= 163M2 (3.5%)

QUALITY NOTE TO PERMITTED USES: FOR THE PURPOSE OF THIS ZONE, THE PROPERTY WILL BE CONSIDERED A SINGLE LOT AND THE FRONT LOT LINE WILL BE MAIN STREET

2 SP100 SITE STATISTICS
SCALE: NTS

THESE DRAWINGS ARE NOT TO BE SCALED:
ALL DIMENSIONS MUST BE VERIFIED BY CONTRACTOR PRIOR TO COMMENCEMENT OF ANY WORK. ANY DISCREPANCIES MUST BE REPORTED DIRECTLY TO VINCENT J. SANTAMAURA, ARCHITECT INC.

NO:	DATE:	ISSUED FOR:
10	30NOV2023	PRELIM CO-ORD
11	07DEC2023	CO-ORD
12	13DEC2023	SPA SUB 3
13	06FEB2024	SPA SUB 3
14	07MAR2024	SPA SUB 4

ADDITIONAL NOTES:

PRELIMINARY
NOT FOR CONSTRUCTION

3 SP100 KEY MAP
SCALE: NTS

PLAN OF SURVEY OF
LOTS 38 TO 44 (BOTH INCLUSIVE)
REGISTERED PLAN 65M-2296
TOWN OF WHITCHURCH-STOUFFVILLE
REGIONAL MUNICIPALITY OF YORK
SCALE 1: 500
David B. Searles Surveying Ltd.
ONTARIO LAND SURVEYORS

4 SP100 LEGAL DESCRIPTION
SCALE: NTS

TOWN FILE NOS.: ZBA22.017
19T(W)-22.007
CDM22.003

NO:	DATE:	REVISION COMMENT:
NUM	DD/MO/YR	REVISION NOTICE

ITEM	ONTARIO BUILDING CODE 2012 DATA MATRIX PART 9		OBC REFERENCE
1	PROJECT DESCRIPTION:	☒ NEW ☐ ADDITION ☐ ALTERATION ☐ CHANGE OF USE	☒ PART 9 - 1.1.2. [A]
2	MAJOR OCCUPANCY(S):	GROUP C, RESIDENTIAL	9.10.2.
3	BUILDING AREA (SQ.M.)	NEW 600 SQ.M. MAX PER BLOCK	1.4.1.2. [A]
4	GROSS AREA (SQ.M.)	NEW 1485 SQ.M. MAX PER BLOCK	1.4.1.2. [A]
5	NUMBER OF STOREYS	ABOVE GRADE 3 BELOW GRADE 1	1.4.1.2. [A] & 9.10.4.
6	NUMBER OF STREETS/FIRE FIGHTER ACCESS	1	9.10.20.
7	BUILDING CLASSIFICATION	GROUP C	9.10.2.
8	SPRINKLER SYSTEM PROPOSED	☐ ENTIRE BUILDING ☐ SELECTED COMPARTMENTS ☐ BASEMENT ☐ IN LIEU OF ROOF RATING ☒ NOT REQUIRED	9.10.8.2. INDEX
9	STANDPIPE REQUIRED	☐ YES ☒ NO	N/A
10	FIRE ALARM REQUIRED	☐ YES ☒ NO	9.10.18.
11	WATER SERVICE/SUPPLY IS ADEQUATE	☒ YES ☐ NO	N/A
12	HIGH BUILDING	☐ YES ☒ NO	N/A
13	CONSTRUCTION RESTRICTIONS	☐ COMBUSTIBLE PERMITTED ☐ NON-COMBUSTIBLE REQUIRED ☒ BOTH	9.10.6.
	ACTUAL CONSTRUCTION	☒ COMBUSTIBLE ☐ NON-COMBUSTIBLE ☒ BOTH	
14	MEZZANINE(S) AREA SQ.M.		9.10.4.1.
15	OCCUPANT LOAD BASED ON	☒ SQ.M./PERSON ☐ DESIGN OF BUILDING 2 PERSONS/BEDROOM = 8 PERSONS TYPICAL PER UNIT	9.9.1.3. 3.7.4.8.(3)(b)
16	BARRIER FREE DESIGN	☐ YES ☒ NO (EXPLAIN)	9.5.2.1.(2)
17	HAZARDOUS SUBSTANCES	☐ YES ☒ NO	9.10.1.3.(4)
18	REQUIRED FIRE RESISTANCE RATING (FRR)	HORIZONTAL ASSEMBLIES FRR (HOURS): FLOORS 0 HR.; ROOF 0 HR.; MEZZANINE 0HR. — LISTED DESIGN NO. OR DESCRIPTION (SG-2): N/A; N/A; N/A	9.10.8. 9.10.8.1
		FRR OF SUPPORTING MEMBERS: FLOORS 0 HR.; ROOF 0 HR.; MEZZANINE 0 HR. — LISTED DESIGN NO. OR DESCRIPTION (SG-2): N/A; N/A; N/A	
19	SPATIAL SEPARATION - CONSTRUCTION OF EXTERIOR WALLS		9. 10.15.4

	WALL	AREA OF EBF (SQ.M.)	L.D. (M)	LH OR HL	PERMITTED MAX. % OF OPENINGS	PROPOSED % OF OPENINGS	FRR (HRS)	LISTED DESIGN OR DESCRIPTION	COMB. CONST.	COMB. CONST. / NONC. CLADDING	NON-COMB. CONST.
BUILDING FACADE	FRONT/UNIT	52.00	10.00 MIN.	N/A	100	30	0HR.	N/A	YES	N/A	N/A
	REAR/UNIT	52.00	6.00 MIN.	N/A	57	25	0 HR	N/A	YES	N/A	N/A
	INT END BLK	112.00	1.50	N/A	7	7	0 HR	N/A	YES	N/A	N/A
	EXT END BLK	112.00	10.00 min.	N/A	20	15	0HR.	N/A	YES	N/A	N/A

FIRM NAME: VINCENT J. SANTAMAURA, ARCHITECT INC.
23 PARNELL CRESCENT
WHITBY, ONTARIO. L1R 2L4
PHONE (905) 668-6207 FAX (905) 668-6207 EMAIL: info@vjsarch.ca

NAME OF PROJECT: 5.80M-TOWNHOUSE - TYPICAL BLOCK MAXIMUM AREAS
PROJECT LOCATION 316 - 386 CAM FELLA BLVD
STOUFFVILLE, ONTARIO.

3 SP100 OBC DATA MATRIX - TOWNHOUSES
SCALE: NTS

ITEM	ONTARIO BUILDING CODE 2012 DATA MATRIX PART 9		OBC REFERENCE
1	PROJECT DESCRIPTION:	☒ NEW ☐ ADDITION ☐ ALTERATION ☐ CHANGE OF USE	☒ PART 9 - 1.1.2. [A]
2	MAJOR OCCUPANCY(S):	GROUP C, RESIDENTIAL	9.10.2.
3	BUILDING AREA (SQ.M.)	NEW 120 SQ.M.	1.4.1.2. [A]
4	GROSS AREA (SQ.M.)	NEW 305 SQ.M.	1.4.1.2. [A]
5	NUMBER OF STOREYS	ABOVE GRADE 3 BELOW GRADE 1	1.4.1.2. [A] & 9.10.4.
6	NUMBER OF STREETS/FIRE FIGHTER ACCESS	1	9.10.20.
7	BUILDING CLASSIFICATION	GROUP C	9.10.2.
8	SPRINKLER SYSTEM PROPOSED	☐ ENTIRE BUILDING ☐ SELECTED COMPARTMENTS ☐ BASEMENT ☐ IN LIEU OF ROOF RATING ☒ NOT REQUIRED	9.10.8.2. INDEX
9	STANDPIPE REQUIRED	☐ YES ☒ NO	N/A
10	FIRE ALARM REQUIRED	☐ YES ☒ NO	9.10.18.
11	WATER SERVICE/SUPPLY IS ADEQUATE	☒ YES ☐ NO	N/A
12	HIGH BUILDING	☐ YES ☒ NO	N/A
13	CONSTRUCTION RESTRICTIONS	☐ COMBUSTIBLE PERMITTED ☐ NON-COMBUSTIBLE REQUIRED ☒ BOTH	9.10.6.
	ACTUAL CONSTRUCTION	☒ COMBUSTIBLE ☐ NON-COMBUSTIBLE ☒ BOTH	
14	MEZZANINE(S) AREA SQ.M.		9.10.4.1.
15	OCCUPANT LOAD BASED ON	☒ SQ.M./PERSON ☐ DESIGN OF BUILDING 2 PERSONS/BEDROOM = 8 PERSONS TYPICAL BLDG	9.9.1.3. 3.7.4.8.(3)(b)
16	BARRIER FREE DESIGN	☐ YES ☒ NO (EXPLAIN)	9.5.2.1.(2)
17	HAZARDOUS SUBSTANCES	☐ YES ☒ NO	9.10.1.3.(4)
18	REQUIRED FIRE RESISTANCE RATING (FRR)	HORIZONTAL ASSEMBLIES FRR (HOURS): FLOORS 0 HR.; ROOF 0 HR.; MEZZANINE 0HR. — LISTED DESIGN NO. OR DESCRIPTION (SG-2): N/A; N/A; N/A	9.10.8. 9.10.8.1
		FRR OF SUPPORTING MEMBERS: FLOORS 0 HR.; ROOF 0 HR.; MEZZANINE 0 HR. — LISTED DESIGN NO. OR DESCRIPTION (SG-2): N/A; N/A; N/A	
19	SPATIAL SEPARATION - CONSTRUCTION OF EXTERIOR WALLS		9. 10.15.4

	WALL	AREA OF EBF (SQ.M.)	L.D. (M)	LH OR HL	PERMITTED MAX. % OF OPENINGS	PROPOSED % OF OPENINGS	FRR (HRS)	LISTED DESIGN OR DESCRIPTION	COMB. CONST.	COMB. CONST. / NONC. CLADDING	NON-COMB. CONST.
BUILDING FACADE	FRONT/UNIT	84.00	14.00 MIN.	N/A	100	30	0HR.	N/A	YES	N/A	N/A
	REAR/UNIT	84.00	6.00 MIN.	N/A	57	25	0 HR	N/A	YES	N/A	N/A
	INT	120.00	1.20	N/A	7	7	0 HR	N/A	YES	N/A	N/A
	INT	120.00	0.60M	N/A	0	0	45 MIN.	N/A	NO	YES	N/A

FIRM NAME: VINCENT J. SANTAMAURA, ARCHITECT INC.
23 PARNELL CRESCENT
WHITBY, ONTARIO. L1R 2L4
PHONE (905) 668-6207 FAX (905) 668-6207 EMAIL: info@vjsarch.ca

NAME OF PROJECT: 11.00M - TYPICAL DETACHED RESIDENCE
PROJECT LOCATION 316 - 386 CAM FELLA BLVD
STOUFFVILLE, ONTARIO.

4 SP100 OBC DATA MATRIX - 11.00M DETACHED HOUSES
SCALE: NTS

5 SP100 FIRE ROUTE SIGN
SCALE: NTS

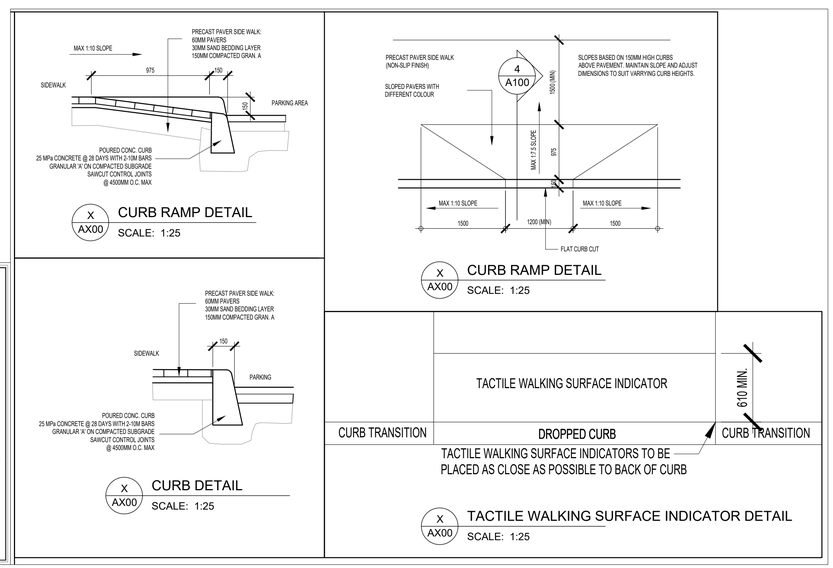

6 SP100 WALKWAY DETAILS
SCALE: NTS

VINCENT J. SANTAMAURA
ARCHITECT
23 PARNELL CRESCENT
WHITBY, ONTARIO. L1R 2L4
PHONE/FAX: (905) 668-6207
email:admin@vjsarch.ca

NOT FOR CONSTRUCTION

NORTH

©VINCENT J. SANTAMAURA, ARCHITECT INC. 2024

CLIENT:
FRONTDOOR DEVELOPMENTS
SUITE 401, 1 WEST PERACE STREET
RICHMOND HILL, ONTARIO. L4B 3K3
TEL.: (905) 886-8287

PROJECT:
RESIDENTIAL DEVELOPMENT
316 - 386 CAM FELLA BLVD
STOUFFVILLE, ONTARIO.

DRAWING TITTLE:
SITE PLAN
& STATS, OBC DATA MATRIX

DATE: 13MAR2024	SCALE: 1:500
DRAWN BY: VJS	CHECKED BY: VJS
PROJECT NUMBER: 2022-04	DRAWING NUMBER: SP-100

File C:\Users\vjs\AppData\Local\Temp\AcPublish_12688\2022-04-Frontdoor-Cam Fella-Stouffville-NEW UNITS.dwg Plotted: Mar 13, 2024 By:vjs

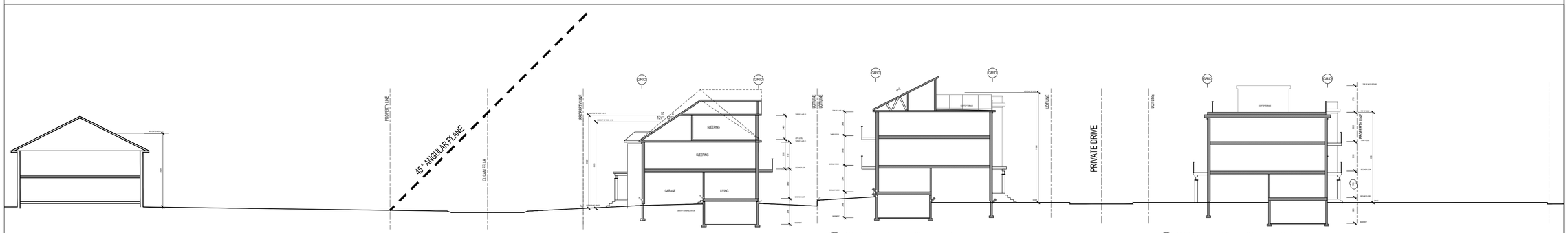

4 A400 CONCEPTUAL MODULE - 13.75M SFD - 2-CAR
SCALE: NTS

4 A400 CONCEPTUAL MODULE - 5.8M TH - 1-CAR
SCALE: NTS

4 A400 CONCEPTUAL MODULE - 5.8M RL TH - 2-CAR
SCALE: NTS

4 A400 SITE SECTION - NORTH/SOUTH
SCALE: 1:150

1 A500 SITE SECTION - NORTH/SOUTH
SCALE: 1:150

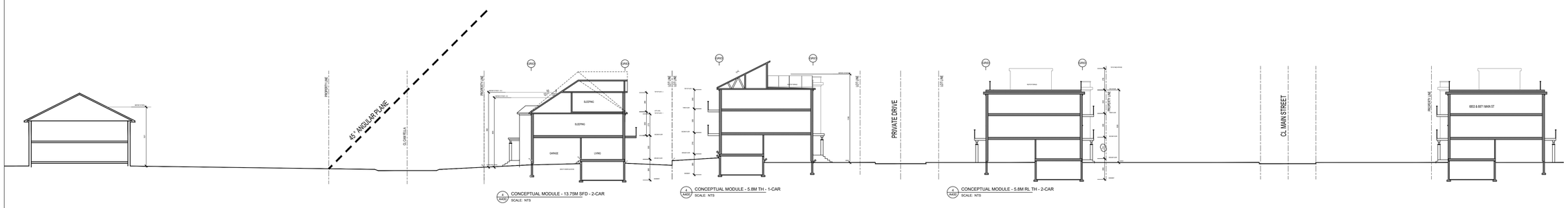

4 A400 CONCEPTUAL MODULE - 13.75M SFD - 2-CAR
SCALE: NTS

4 A400 CONCEPTUAL MODULE - 5.8M TH - 1-CAR
SCALE: NTS

4 A400 CONCEPTUAL MODULE - 5.8M RL TH - 2-CAR
SCALE: NTS

2 A500 SITE SECTION - NORTH/SOUTH - 2
SCALE: 1:250

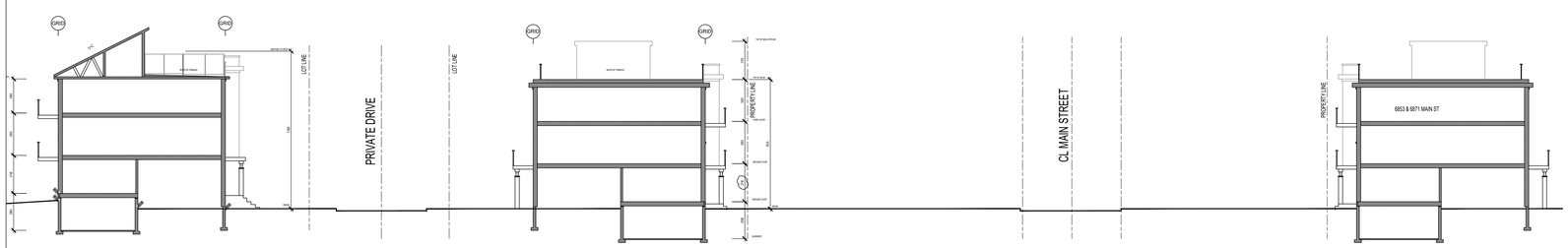

CONCEPTUAL MODULE - 5.8M TH - 1-CAR
SCALE: NTS

4 A400 CONCEPTUAL MODULE - 5.8M RL TH - 2-CAR
SCALE: NTS

3 A500 SITE SECTION - MAIN STREET
SCALE: 1:250

THESE DRAWINGS ARE NOT TO BE SCALED:
ALL DIMENSIONS MUST BE VERIFIED BY CONTRACTOR PRIOR TO COMMENCEMENT OF ANY WORK. ANY DISCREPANCIES MUST BE REPORTED DIRECTLY TO VINCENT J. SANTAMAURA, ARCHITECT INC.

NO:	DATE:	ISSUED FOR:
10	30NOV2023	PRELIM CO-ORD
11	07DEC2023	CO-ORD
12	13DEC2023	SPA SUB 3
13	06FEB2024	SPA SUB 3

ADDITIONAL NOTES:

PRELIMINARY
NOT FOR CONSTRUCTION

3 SP100 KEY MAP
SCALE: NTS

4 SP100 LEGAL DESCRIPTION
SCALE: NTS

TOWN FILE NOS.: ZBA22.017
19T(W)-22.007
CDM22.003

NO:	DATE:	REVISION COMMENT:
NUM	DD/MO/YR	REVISION NOTICE

VINCENT J. SANTAMAURA
ARCHITECT
23 PARNELL CRESCENT
WHITBY, ONTARIO. L1R 2L4
PHONE/FAX: (905) 668-9207
email:admin@vjsarch.ca

NOT FOR CONSTRUCTION

NORTH

©VINCENT J. SANTAMAURA, ARCHITECT INC. 2024

CLIENT:
FRONTDOOR DEVELOPMENTS
SUITE 401, 1 WEST PERACE STREET
RICHMOND HILL, ONTARIO. L4B 3K3
TEL.: (905) 886-8287

PROJECT:
RESIDENTIAL DEVELOPMENT
268 - 296 CAM FELLA BLVD
STOUFFVILLE, ONTARIO.

DRAWING TITTLE:
SITE SECTIONS

DATE: 12FEB2024	SCALE: 1:150
DRAWN BY: VJS	CHECKED BY: VJS
PROJECT NUMBER: 2022-04	DRAWING NUMBER: A500

File:C:\Users\vjs\AppData\Local\Temp\AcPublish_6320\2022-04-Frontdoor-Cam Fella-Stouffville-NEW UNITS.dwg Plotted: Feb 11, 2024 By:vjs

1 A400 10.82M SINGLE DETACHED LOTS - STREETSCAPE
SCALE: 1:150

2 A400 5.80M TOWNHOUSE - CONCEPT FRONT BLOCK ELEVATION
SCALE: 1:150

3 A400 5.80M TOWNHOUSE - REAR LANE - CONCEPT FRONT BLOCK ELEVATION
SCALE: 1:150

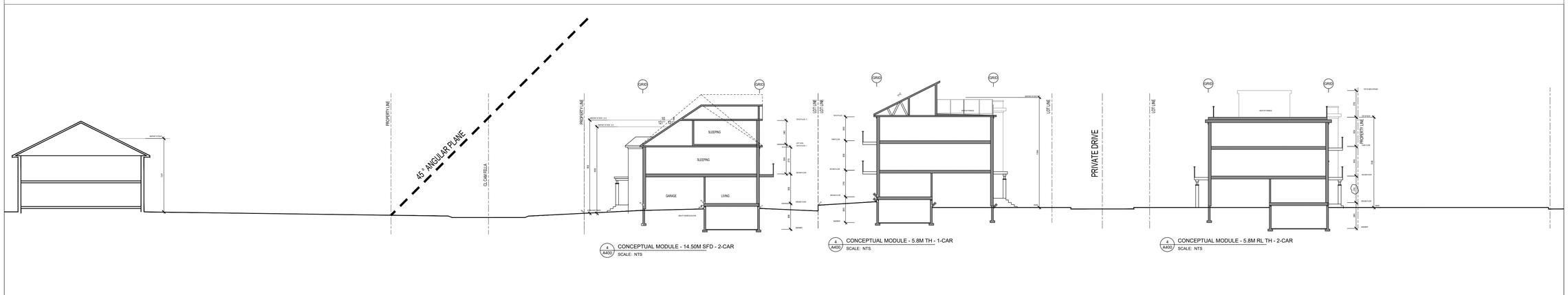

4 A400 CONCEPTUAL MODULE - 14.50M SFD - 2-CAR
SCALE: NTS

4 A400 CONCEPTUAL MODULE - 5.8M TH - 1-CAR
SCALE: NTS

4 A400 CONCEPTUAL MODULE - 5.8M RL TH - 2-CAR
SCALE: NTS

4 A400 SITE SECTION - NORTH/SOUTH
SCALE: 1:150

THESE DRAWINGS ARE NOT TO BE SCALED:
ALL DIMENSIONS MUST BE VERIFIED BY CONTRACTOR PRIOR TO COMMENCEMENT OF ANY WORK. ANY DISCREPANCIES MUST BE REPORTED DIRECTLY TO VINCENT J. SANTAMAURA, ARCHITECT INC.

NO:	DATE:	ISSUED FOR:
10	30NOV2023	PRELIM CO-ORD
11	07DEC2023	CO-ORD
12	13DEC2023	SPA SUB 3
13	06FEB2024	SPA SUB 3
14	07MAR2024	SPA SUB 4

ADDITIONAL NOTES:

PRELIMINARY
NOT FOR CONSTRUCTION

3 SP100 KEY MAP
SCALE: NTS

4 SP100 LEGAL DESCRIPTION
SCALE: NTS

TOWN FILE NOS.: ZBA22.017
19T(W)-22.007
CDM22.003

NO:	DATE:	REVISION COMMENT:
NUM	DD/MO/YR	REVISION NOTICE

VINCENT J. SANTAMAURA
ARCHITECT
23 PARNELL CRESCENT
WHITBY, ONTARIO. L1R 2L4
PHONE/FAX: (905) 668-9207
email:admin@vjsarch.ca

NOT FOR CONSTRUCTION

NORTH

©VINCENT J. SANTAMAURA, ARCHITECT INC. 2024

CLIENT:
FRONTDOOR DEVELOPMENTS
SUITE 401, 1 WEST PERACE STREET
RICHMOND HILL, ONTARIO. L4B 3K3
TEL.: (905) 886-8287

PROJECT:
RESIDENTIAL DEVELOPMENT
316 - 386 CAM FELLA BLVD
STOUFFVILLE, ONTARIO.

DRAWING TITTLE:
TYPICAL ELEVATIONS
STREETSCAPES & SITE SECTION

DATE: 14JUL2023	SCALE: 1:150
DRAWN BY: VJS	CHECKED BY: VJS
PROJECT NUMBER: 2022-04	DRAWING NUMBER: A400